AERODROME OBSTACLE CHART - ICAO

TYPE A (OPERATING LIMITATIONS)

DIMENSIONS AND ELEVATIONS IN METRES

PICO (LPPI)

MAGNETIC VARIATION 09º W - 2020

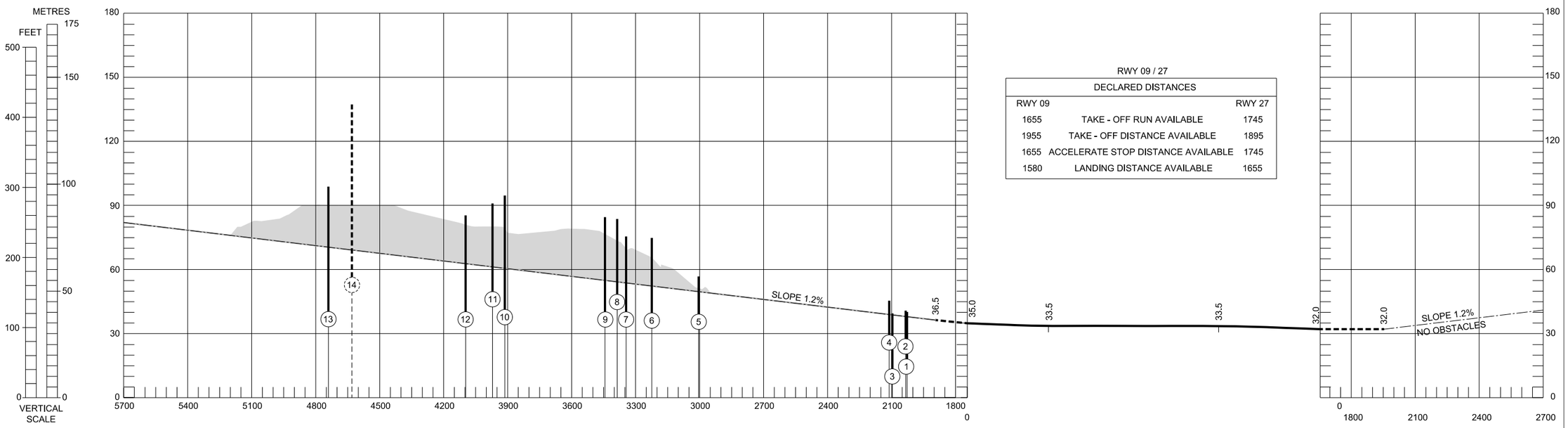

RWY 09 / 27

DECLARED DISTANCES		
RWY 09		RWY 27
1655	TAKE - OFF RUN AVAILABLE	1745
1955	TAKE - OFF DISTANCE AVAILABLE	1895
1655	ACCELERATE STOP DISTANCE AVAILABLE	1745
1580	LANDING DISTANCE AVAILABLE	1655

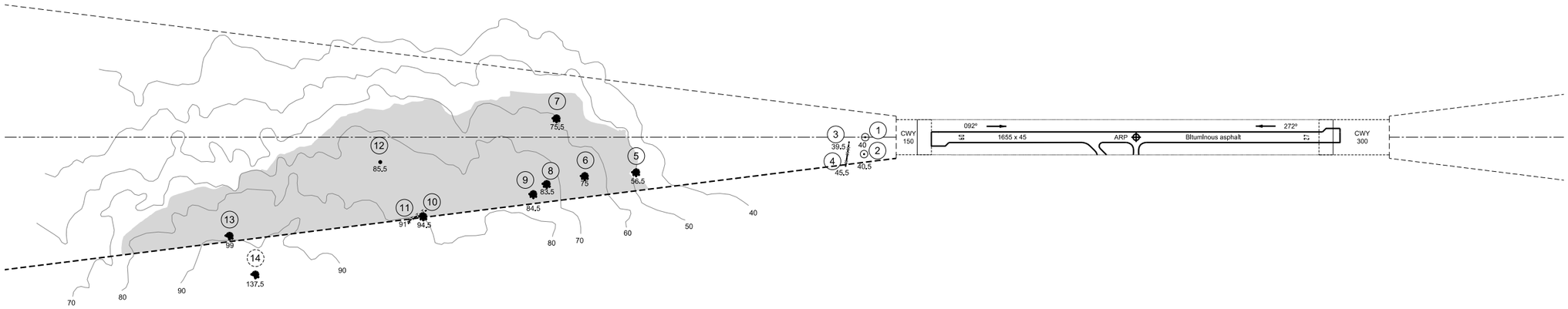

LEGEND	
IDENTIFICATION NUMBER	1
POLE, TOWER, SPIRE, ANTENNA, ETC.	⊙
TREE OR SHURB	
TRANSMISSION LINE OR OVERHEAD CABLE	
FENCE	
NATURAL HIGH POINT	•
TERRAIN PENETRATING OBSTACLE PLANE	

HORIZONTAL SCALE

METRES

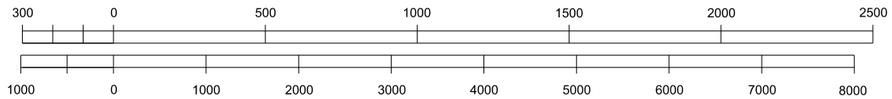

FEET

AMENDMENT RECORD		
Nº	DATE	ENTERED BY

MAG VAR updated.

THIS PAGE INTENTIONALLY LEFT BLANK